Detectors for HV Systems

Test Head Type PHEIII/k for Voltage Detectors

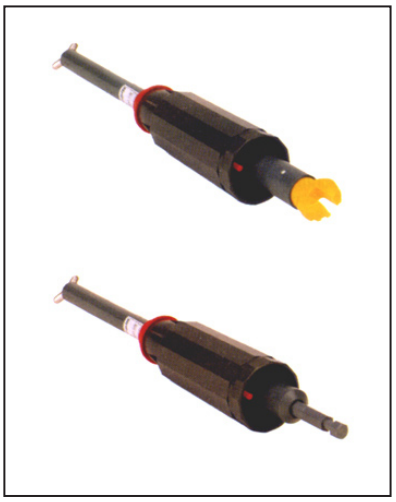

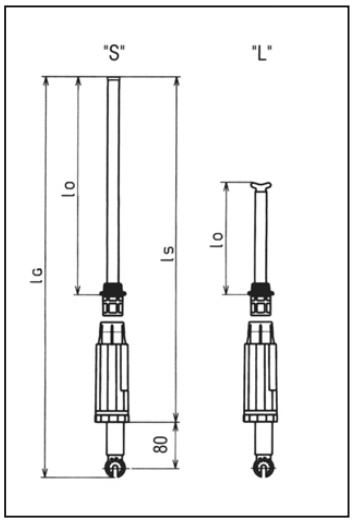

Features:

Insulating operating rod	NOT SUPPLIED. Sunrise fitting suitable for use with universal operating stick
Indicator unit	Fully insulated grey plastic
Indication	Visual LEDs and acoustic signal
Test probe	Fibreglass-reinforced epoxy resin Interchangeable for switchgear and overhead lines Detachable for easy storage
Probe electrode	Tinned copper, removable, for switchgear and overhead lines
Discharge current	Less than 0.5mA
Application	For switchgear and overhead lines Suitable for use in wet weather

Indications:

Self-test	Push button - single acoustic signal, then steady green light
Ready for operation	Steady green light
Voltage present	Flashing red light and acoustic signal

CODE	NOMINAL VOLTAGE kV	TYPE	DIMENSIONS mm			WEIGHT g
			Lg	Lo	Ls	
767 931	10….30	“S” for switchgear and overhead lines	1145	880	1050	960
767 932	10….30	“L” only for overhead lines	465	200	370	640

Operating instructions available on request from Thew & McCann

Ph:(+61) 07 3826 6000 Fax:(+61) 07 3826 6066 Email:sales@thew.com.au Website: www.thew.com.au
45 Enterprise Street Cleveland (PO Box 1796 Cleveland DC) Queensland 4163 Australia